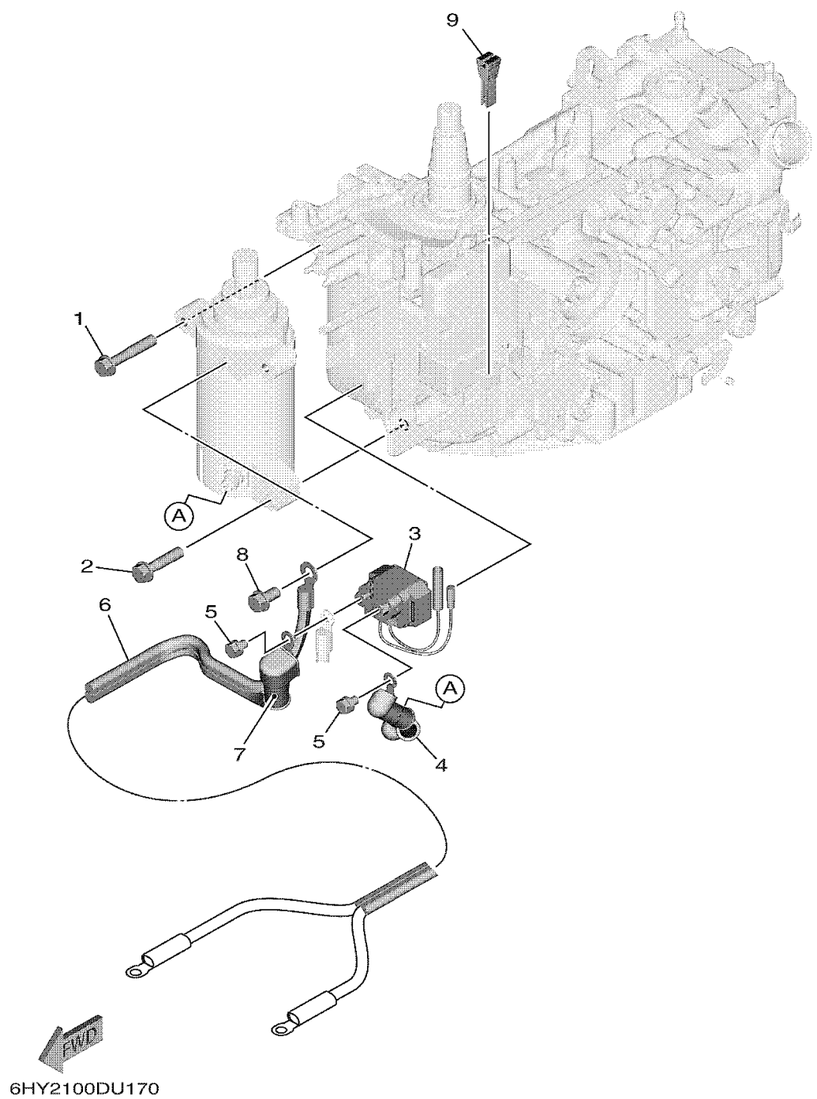

ELECTRICAL 3

Ref No.	Part Number	Description	Qty	Remarks
1	97513-08545-00	BOLT, WITH WASHER	0	
2	97513-08535-00	BOLT, WITH WASHER	0	
3	6FM-81940-00-00	STARTER RELAY ASSY	0	
4	6AH-82117-01-00	WIRE, LEAD	0	
5	97E95-06610-00	BOLT, HEXAGON W/W DEEP RECESS	0	
6	6FM-82105-01-00	BATTERY CABLE (L: 2.0M)	0	
7	6P2-82119-00-00	COVER, LEAD WIRE	0	
8	97E95-08516-00	BOLT, HEXAGON W/W DEEP RECESS	0	
9	67F-2812A-00-00	PULLER, FUSE	0	